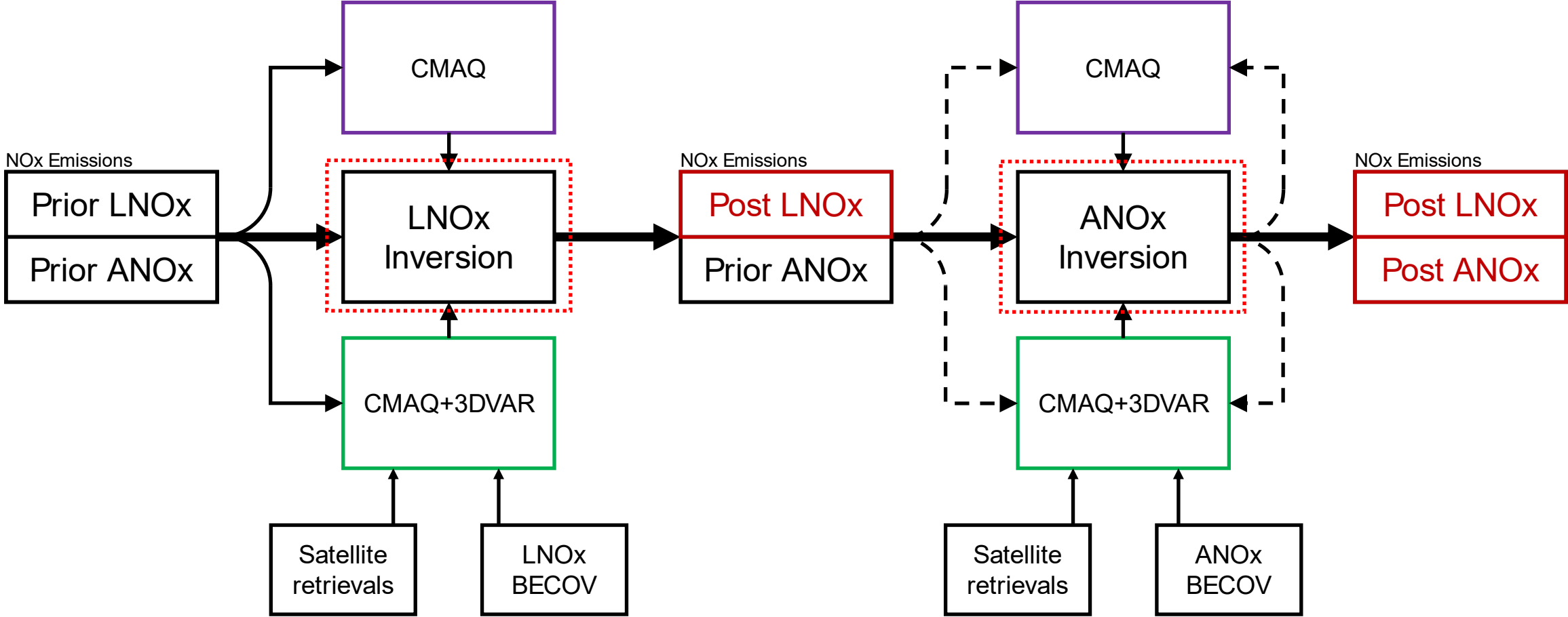
CMAQ
NOx Emissions
Prior LNOx
Prior ANOx
LNOx Inversion
CMAQ+3DVAR
Satellite retrievals
LNOx BECOV
NOx Emissions
Post LNOx
Prior ANOx
CMAQ
ANOx Inversion
CMAQ+3DVAR
Satellite retrievals
ANOx BECOV
NOx Emissions
Post LNOx
Post ANOx