Supplementary information to:

Non methane hydrocarbon (NMHC) fingerprints of major urban and agricultural emission sources for use in source apportionment studies

Ashish Kumar[1], Vinayak Sinha[1*], Muhammed Shabin[1], Haseeb Hakkim[1], Bernard Bonsang[2] and Valerie Gros[2]

[1] Department of Earth and Environmental Sciences, Indian Institute of Science Education and Research Mohali, Sector 81, S.A.S Nagar, Manauli PO, Punjab, 140306, India.

[2] LSCE, Laboratoire des Sciences du Climat et de l'Environnement, CNRS-CEA-UVSQ, IPSL, Université Paris Saclay, Orme des Merisiers, F91191 Gif-sur-Yvette, France.

Correspondence to: Dr. Vinayak Sinha (vsinha@iisermohali.ac.in)

Figure S1: Whole air sample collection from **a)** paddy stubble fire: flaming; **b)** paddy stubble fire: smouldering; **c)** garbage fire: flaming; and **d)** garbage fire: smouldering. The flaming and smouldering fires were distinguished based upon the presence of flame and white smoke as per past experiences (Chandra et al 2017, Kumar et al., 2018).

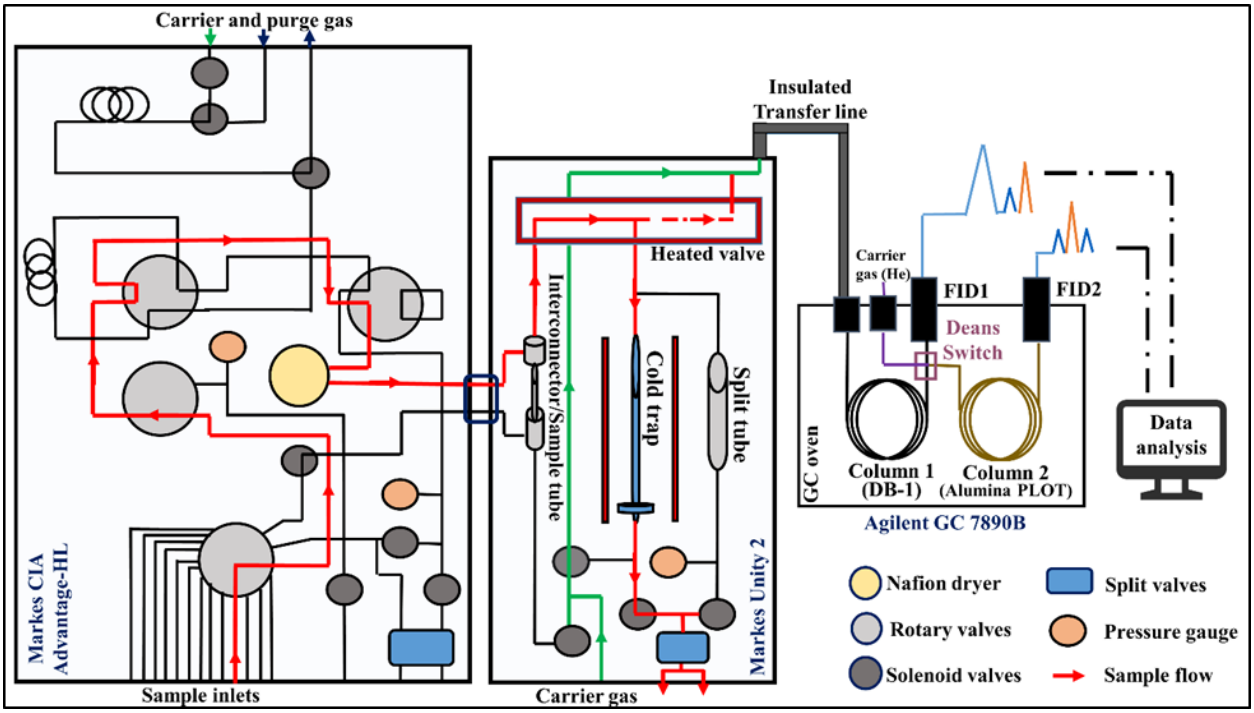

Figure S2: Schematic representation of the TD-GC-FID instrument during a typical sample injection and chromatographic run.

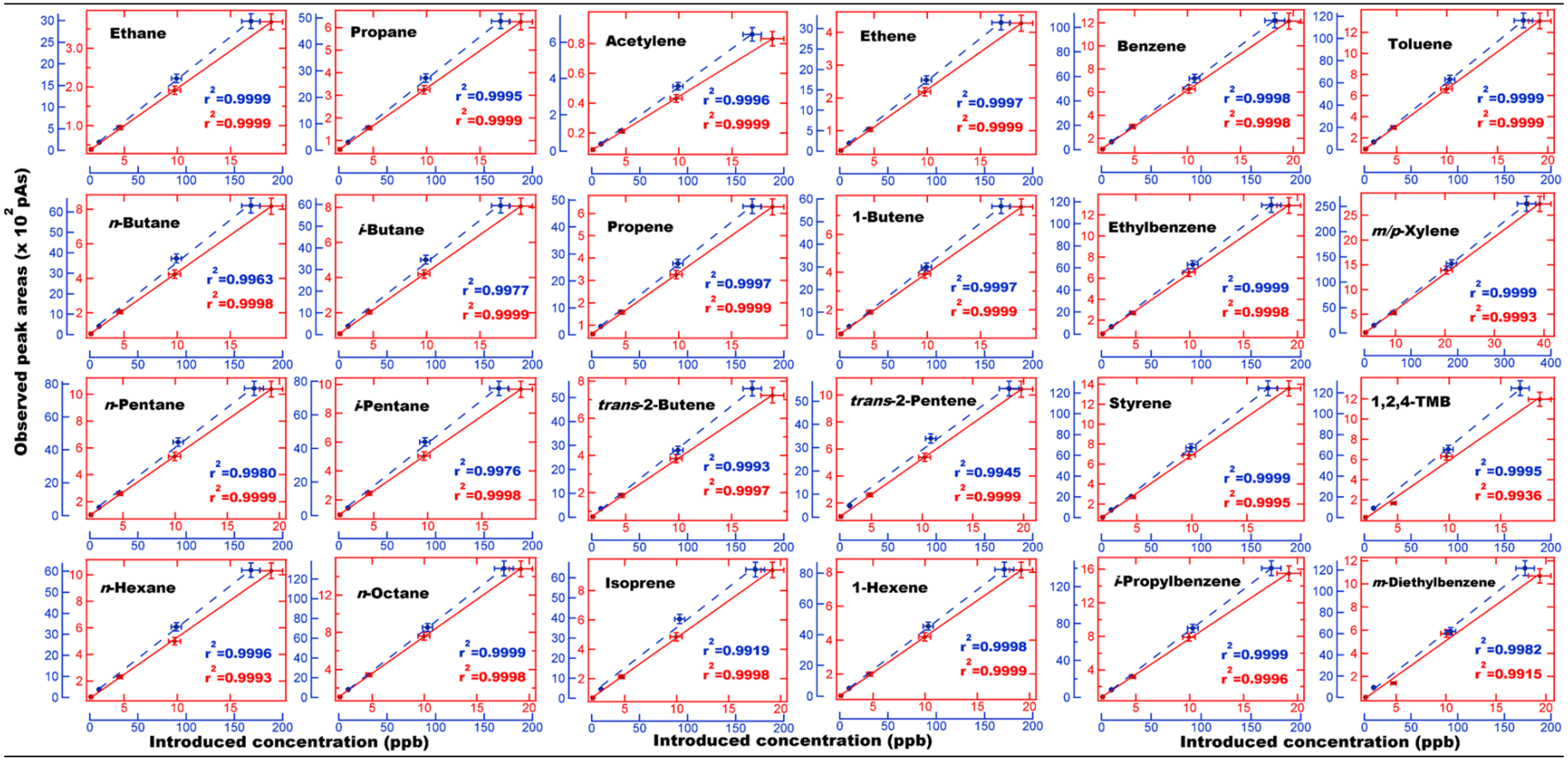

Figure S3: Sensitivity and linearity (r^2>0.99) of NMHCs obtained from the calibration experiments performed over a dynamic range of two order of magnitude between 2-200ppb over two sets of calibrations: regular calibration of 2-20 ppb and a high mixing ratio calibration of 10-200ppb. The calibrations were performed via dynamic dilution with zero air using a standard gas calibration unit (GCU-s v2.1, Ionimed Analytik, Innsbruck, Austria). The horizontal error bars represent the root mean square propagation of errors due 5 % uncertainty in the VOC standard and 2% error for each of the two mass flow controllers used for calibration. The vertical error bars represent the uncertainty in instrumental measurements while sampling the standard gas at each dilution mixing ratio.

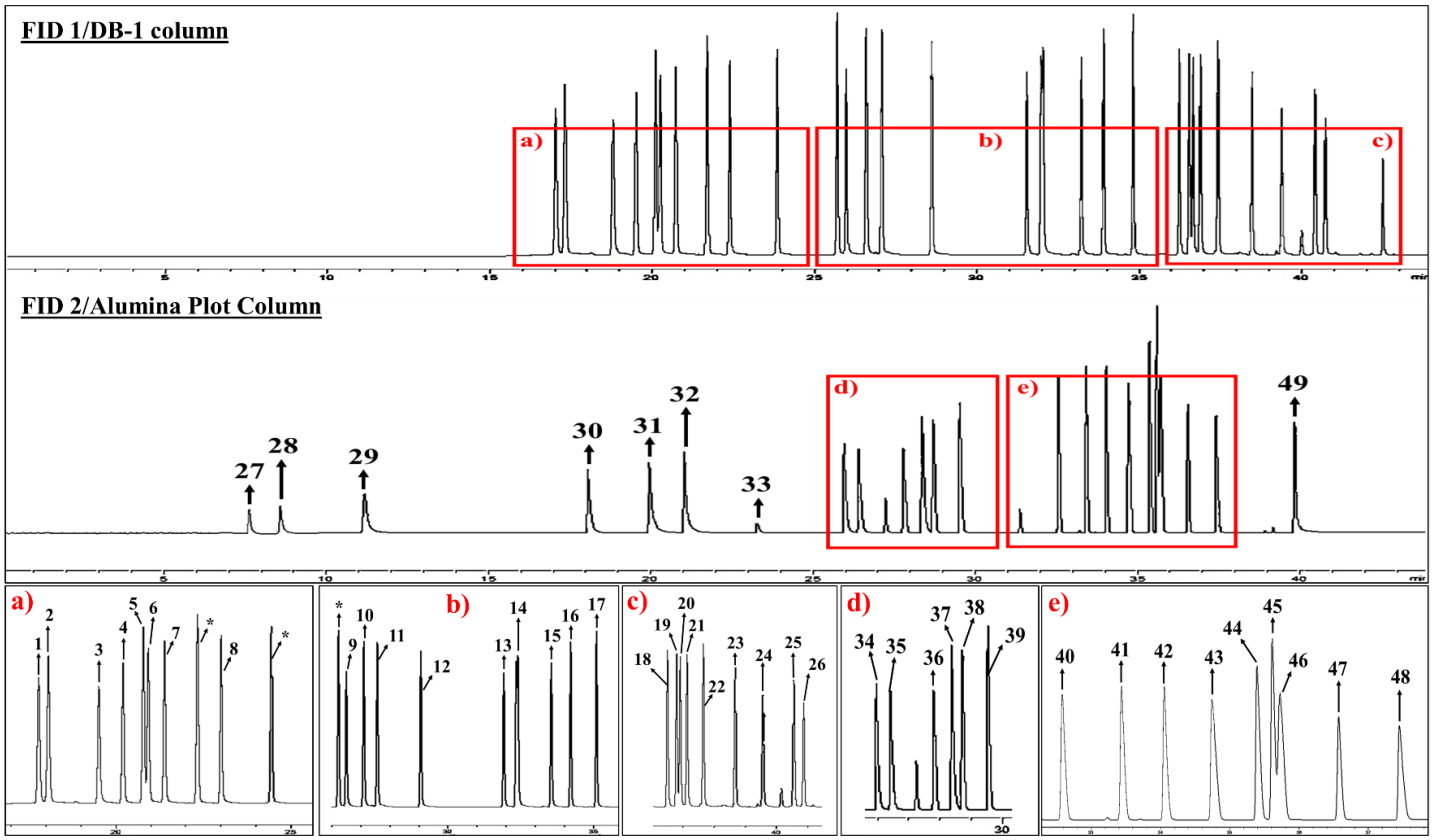

1. Methylcyclopentane, 2. 2,4-Dimethylpentane, 3. Benzene, 4. Cyclohexane, 5. 2-Methylhexane, 6. 2,3-Dimethylpentane, 7. 2-Methylhexane, 8. *n*-Heptane, 9. Toluene, 10. 2-Methyheptane, 11. 3-Methylheptane, 12. *n*-Octane, 13. Ethylbenzene, 14. *m/p*-Xylene, 15. Styrene, 16. *o*-Xylene, 17. *i*-Propylbenzene, 18. *n*-Propylbenzene, 19. *m*-Ethyltoluene, 20. *p*-Ethyltoluene, 21.1,3,5-Trimethylbenzene, 22. *o*-Ethyltoluene, 23. 1,2,4-Trimethylbenzene, 24. 1,2,3-Trimethylbenzene, 25. *m*-Diethylbenzene, 26. *p*-Diethylbenzene , 27. Ethane, 28. Ethene, 29. Propane, 30. Propene, 31. *i*-Butane, 32. *n*-Butane, 33. Acetylene, 34. *trans*-2-Butene, 35. 1-Butene, 36. *cis*-2-Butene, 37. Cyclopentane, 38. *i*-Pentane, 39. *n*-Pentane, 40. *trans*-2-Pentene, 41. 1-Pentene, 42. *cis*-2-Pentene, 43. 2,2-Dimethylbutane, 44. 2,3-Dimethylbutane, 45. 2-Methylpentane, 46. 3-Methylpentane, 47. *n*-Hexane, 48. Isoprene, 49. 1-Hexene.

Figure S4: A typical chromatogram showing all the target compounds measured during a standard gas calibration experiment using VOC gas standard 1 (Chemtron Science Laboratories Pvt. Ltd., Navi Mumbai, India). NMHCs (2,2,4-trimethylpentane, 2,3,4-trimethylpentane and methylcyclohexane) which were well resolved and separated in calibration chromatograms but poorly resolved in the analysis of some point source samples are highlighted as (*) and were excluded from this study.

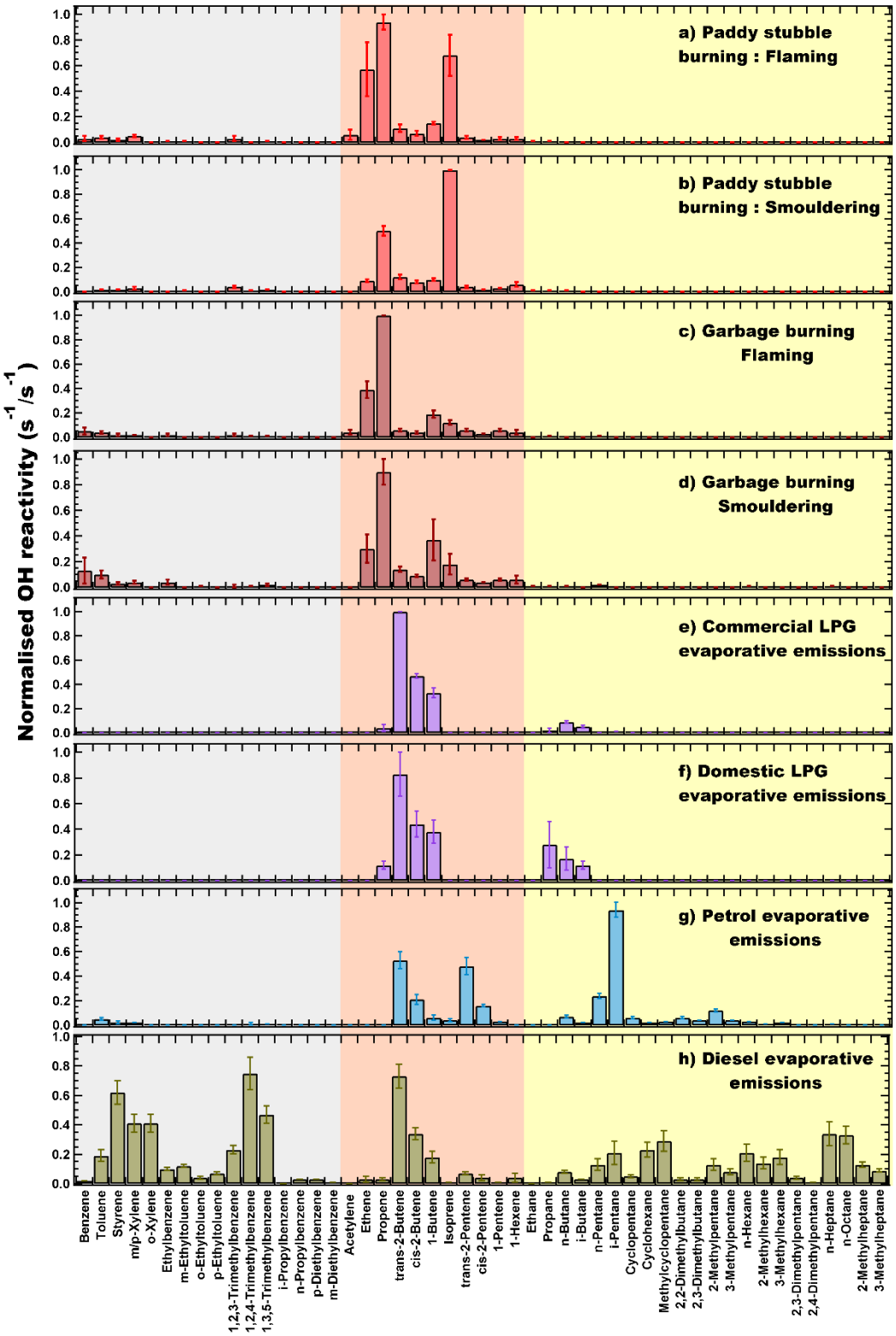

Figure S5: Normalised profiles of calculated OH reactivity (s^{-1}) in **a)** Paddy stubble burning: Flaming; **b)** Paddy stubble burning: Smouldering; **c)** Garbage burning: Flaming; **d)** Garbage

burning: Smouldering; **e)** Commercial LPG evaporative emissions; **f)** Domestic LPG evaporative emissions; **g)** Petrol evaporative emissions; **h)** Diesel evaporative emissions. The grey colour highlights the aromatics, red colour highlights the alkenes and alkyne and the yellow colour highlights the alkanes. The OH reactivity of the NMHCs are normalised to the NMHC with the maximum OH reactivity in the respective source sample as:

$$f = [Y_i]/[Y_{max}]$$

Where, $[Y_i]$ is the NMHC OH reactivity and $[Y_{max}]$ is the NMHC with the maximum OH reactivity in the respective source sample. Error bars represent the standard error of averaged Normalised ratio.

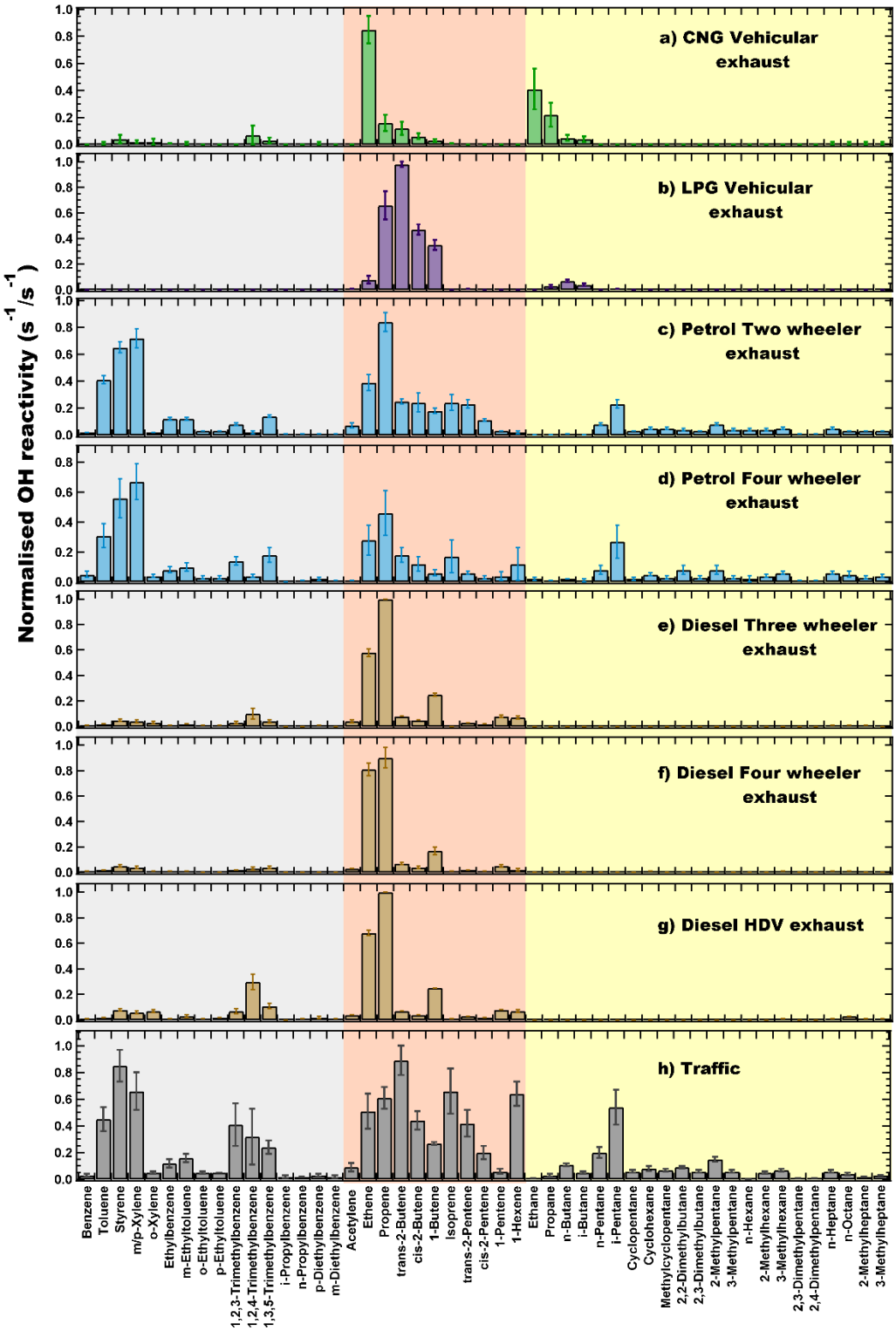

Figure S6: Normalised profiles of calculated OH reactivity (s^{-1}) in **a)** CNG vehicular exhaust; **b)** LPG vehicular exhaust; **c)** Petrol two wheeler exhaust; **d)** Petrol four wheeler exhaust; **e)** Diesel three wheeler vehicular exhaust; **f)** Diesel four wheeler vehicular exhaust **g)** Diesel heavy duty

vehicle (HDV) exhaust **h)** Traffic, derived from the TD-GC-FID measurements. Error bars represent the standard error of averaged normalised ratio. The grey colour highlights the aromatics, red colour highlights the alkenes and alkyne and the yellow colour highlights the alkanes.

Table S1. Parameters for the GC oven temperature ramp program and FIDs (Flame ionisation detectors).

Parameter	Value
Initial temp	30 ^{o}C
Initial hold time	12 min
Rate 1	5 ^{o}C/min
Final temperature 1	170 ^{o}C
Hold time 1	1 min
Rate 2	15 ^{o}C/min
Final temperature 2	200 ^{o}C
Hold time 2	1 min
Total Run time	44 min
FID Temperature	250 ^{o}C
FID Air flow	400 mL/min
FID H_2 fuel flow	40 mL/min
FID N_2 makeup flow	20 mL/min

5

Table S2: Average concentrations (ppb) and standard deviation (in parentheses) of the compounds >50ppb after dilution.

Petrol 2 Wheelers (n = 14)		**Petrol 4 Wheelers (n = 9)**		**Diesel HDVs (n = 15)**	
Compounds	**diluted concentration**	**Compounds**	**diluted concentration**	**Compounds**	**diluted concentration**
Toluene	96.3 (45.7)	Ethane	81.8 (62.28)	Ethene	150.4 (35.16)
m/p-Xylene	55.1 (32.2)	*i*-Pentane	72.9 (71.55)	Propene	59.5 (14.26)
Acetylene	95.6 (74.7)				
Ethene	67.5 (48.9)				
i-Pentane	87.2 (56.3)				
Toluene	96.3 (45.8)				
m/p-Xylene	55.1 (32.2)				
Diesel 4 Wheelers (n = 12)		**Diesel 3 Wheelers (n = 7)**		**LPG Vehicles (n = 9)**	
Acetylene	58.9 (37.9)	Acetylene	51.7 (25.5)	Propene	107.5 (75.6)
Ethene	164.6 (27.2)	Ethene	78.1 (18.3)	*trans-2*-Butene	71.8 (35.2)
Propene	53.2 (21.8)			1-Butene	55.2 (40.8)
				Propane	105.5 (57.6)
				n-Butane	132.8 (43.0)
				i-Butane	93.6 (37.7)
				Propene	107.5 (75.6)
CNG Vehicles (n=7)		**Paddy fires Flaming (n=3)**		**Paddy fires Smouldering (n=3)**	
Ethane	166.1 (17.8)	Ethene	65.4 (23.5)	Ethane	132.6 (97.67)
Garbage fires Flaming (n=5)		**Garbage fires Smouldering (n=5)**		**Traffic (n=3)**	
Acetylene	76.9 (56.6)	Ethane	59.2 (65.8)	None	
Ethene	83.8 (54.7)				
Propene	61.2 (35.3)				
Domestic LPG evaporative (n=5)		**Commercial LPG evaporative (n=5)**		**Petrol evaporative (n=10)**	**Diesel evaporative (n=10)**
Propane	147.4 (48.7)	*trans*-2-Butene	52.5 (20.6)	None	None
n-Butane	55.1 (22.5)	*n*-Butane	127.9 (38.9)		
i-Butane	53.6 (21.2)	*i*-Butane	62.6 (22.4)		

Table S3: Details of VOC gas standards used in calibration experiments. Mixing ratios reported here are in ppm.

VOC Standard 1: Chemtron Science Laboratories Pvt. Ltd., Navi Mumbai, India.

VOC Standard 2: Apel Riemer Environmental. Inc., Colorado, USA.

Compounds	**Mixing ratios in VOC Standard 1**	**Mixing ratios in VOC Standard 2**	**Compounds**	**Mixing ratios in VOC Standard 1**	**Mixing ratios in VOC Standard 2**
		Aromatics (n=16)			
Benzene	1.03	0.49	*p*-Ethyltoluene	1.01	
Toluene	1.01	0.47	1,2,3-Trimethylbenzene	1.01	
Styrene	0.99		1,2,4-Trimethylbenzene	0.99	
m/p-Xylene	2.06		1,3,5-Trimethylbenzene	1.03	
o-Xylene	1.01		*i*-Propylbenzene	1.01	
Ethylbenzene	1.01		*n*-Propylbenzene	0.99	
m-Ethyltoluene	1.01		*m*-Diethylbenzene	1.02	
o-Ethyltoluene	1.03		*p*-Diethylbenzene	1.01	
		Alkyne (n=1)			
Acetylene	0.99				
		Alkenes (n=10)			
Ethene	0.99		Isoprene	1.01	0.48
Propene	0.99		1-Pentene	1.00	
1-Butene	0.99		*trans*-2-Pentene	1.04	
trans-2-Butene	0.99		*cis*-2-Pentene	1.01	
cis-2-Butene	0.99		1-Hexene	1.01	
		Alkanes (n=22)			
Ethane	0.99		*n*-Hexane	0.99	
Propane	0.99		2-Methylpentane	0.99	
n-Butane	0.99		3-Methylpentane	0.99	
i-Butane	0.99		2-Methylhexane	1.01	
i-Pentane	0.98		3-Methylhexane	0.99	
n-Pentane	1.01		2,3-Dimethylpentane	1.01	
Cyclopentane	1.04		2,4-Dimethylpentane	1.01	
Cyclohexane	1.01		*n*-Heptane	1.03	
Methylcyclopentane	1.01		*n*-Octane	1.01	
2,2-Dimethylbutane	1.01		2-Methylheptane	1.03	
2,3-Dimethylbutane	0.99		3-Methylheptane	1.03	

Table S4: Average sensitivity factors (pAs/ppb) and standard deviation (pAs/ppb) for 49 NMHCs obtained from thirteen calibration experiments performed between December 2016 and October 2018 using the calibration standard 1 (Chemtron Science Laboratories Pvt. Ltd., Navi Mumbai, India).

Compounds	Average sensitivity (pAs/ppb)	Standard deviation (pAs/ppb)	Compounds	Average sensitivity (pAs/ppb)	Standard deviation (pAs/ppb)
Aromatics (n=16)					
Benzene	67.8	5.6	*p*-Ethyltoluene	79.3	9.6
Toluene	74.6	6.6	1,2,3-Trimethylbenzene	58.7	8.0
Styrene	81.2	8.2	1,2,4-Trimethylbenzene	78.8	10.6
m/p-Xylene	79.8	8.3	1,3,5-Trimethylbenzene	76.6	9.3
o-Xylene	91.8	9.6	*i*-Propylbenzene	90.5	9.2
Ethylbenzene	74.8	7.3	*n*-Propylbenzene	85.0	9.4
m-Ethyltoluene	79.2	9.3	*m*-Diethylbenzene	68.6	9.7
o-Ethyltoluene	80.1	9.5	*p*-Diethylbenzene	63.5	10.0
Alkyne (n=1)					
Acetylene	5.2	0.9			
Alkenes (n=10)					
Ethene	24.8	2.6	Isoprene	53.2	4.9
Propene	35.8	3.4	1-Pentene	57.8	5.1
1-Butene	41.4	5.1	*trans*-2-Pentene	56.6	5.3
trans-2-Butene	40.1	5.0	*cis*-2-Pentene	56.4	5.3
cis-2-Butene	40.3	4.8	1-Hexene	45.9	4.1
Alkanes (n=22)					
Ethane	20.7	1.9	*n*-Hexane	62.4	6.1
Propane	35.9	3.2	2-Methylpentane	73.5	7.1
n-Butane	46.4	4.5	3-Methylpentane	81.4	7.7
i-Butane	45.3	4.4	2-Methylhexane	86.5	7.3
i-Pentane	56.4	5.4	3-Methylhexane	78.8	6.8
n-Pentane	58.4	5.5	2,3-Dimethylpentane	74.4	6.8
Cyclopentane	51.5	4.5	2,4-Dimethylpentane	79.2	6.6
Cyclohexane	71.0	5.5	*n*-Heptane	77.3	6.9
Methylcyclopentane	68.9	5.6	*n*-Octane	86.1	8.5
2,2-Dimethylbutane	70.6	6.6	2-Methylheptane	85.7	7.4
2,3-Dimethylbutane	70.9	6.7	3-Methylheptane	86.3	8.2

Table S5: Summary of Tukey pairwise HSD (honestly significant difference) test results performed for the averaged OFP values from the different emission sources. The significant differences in the mean values at confidence interval > 95% are ascertained by p (same mean) < 0.05 and are highlighted in bold.

	Diesel vehicles	Paddy smouldering	Paddy flaming	LPG vehicles	Garbage flaming	Garbage smouldering	Petrol vehicles	LPG evaporative	Diesel evaporative	Petrol evaporative	CNG vehicles
Diesel vehicles	-	-	σ	-	**2σ**	**3σ**	**4σ**	**4σ**	**4σ**	**4σ**	**4σ**
Paddy smouldering		-	-	-	-	σ	**2σ**	**2σ**	**4σ**	**4σ**	**4σ**
Paddy flaming			-	-	-	-	σ	-	**2σ**	**4σ**	**4σ**
LPG vehicles				-	-	σ	**2σ**	**2σ**	**3σ**	**4σ**	**4σ**
Garbage flaming					-	-	-	-	σ	**4σ**	**4σ**
Garbage smouldering						-	-	-	-	**4σ**	**4σ**
Petrol vehicles							-	-	-	**2σ**	**4σ**
LPG evaporative								-	-	-	**4σ**
Diesel evaporative									-	σ	**3σ**
Petrol evaporative										-	-
CNG vehicles											-

Table S6: Summary of Tukey pairwise HSD (honestly significant difference) test results performed for the averaged BTEX% from the different emission sources. The significant differences in the mean values at confidence interval > 95% are ascertained by p (same mean) < 0.05 and are highlighted in bold.

	Petrol vehicles	Garbage smouldering	Garbage flaming	Paddy flaming	Diesel vehicles	Paddy smouldering	Diesel evaporative	Petrol evaporative
Petrol vehicles	-	-	-	-	**2σ**	**4σ**	**2σ**	**4σ**
Garbage smouldering		-	-	**2σ**	**4σ**	**4σ**	**4σ**	**4σ**
Garbage flaming			-	-	**2σ**	**3σ**	σ	**4σ**
Paddy flaming				-	-	σ	-	**4σ**
Diesel vehicles					-	-	-	σ
Paddy smouldering						-	-	-
Diesel evaporative							-	**2σ**
Petrol evaporative								-