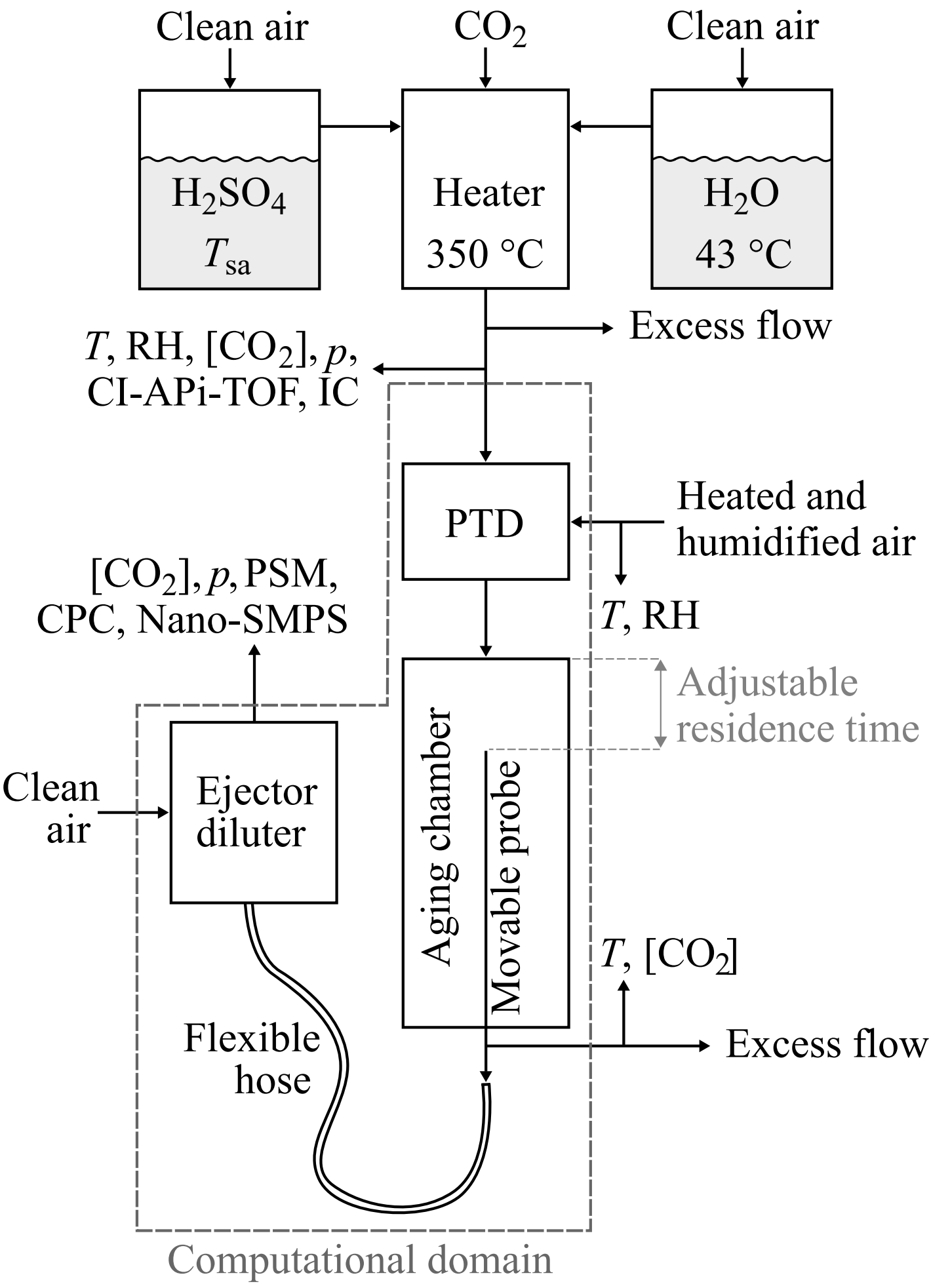
Clean air
CO_2
Clean air
H_2SO_4
T_{sa}
Heater
350 °C
H_2O
43 °C
Excess flow
T, RH, [CO_2], p,
CI-APi-TOF, IC
PTD
Heated and
humidified air
[CO_2], p, PSM,
CPC, Nano-SMPS
T, RH
Adjustable
residence time
Clean
air
Ejector
diluter
Aging chamber
Movable probe
T, [CO_2]
Flexible
hose
Excess flow
Computational domain